MODEL: E-DUC15AE28-1

Direct Drive Upblast Exhaust Fan

The E-DUC15AE28-1 is designed as a roof-mounted exhaust solution where controlled air movement and upward discharge are important. Its direct-drive arrangement combines a compact fan configuration with a backward-curved centrifugal impeller for dependable exhaust performance.

MODEL IDENTIFICATION & CLASSIFICATION

Field	Value
Model Number	E-DUC15AE28-1
Product Type	Direct Drive Upblast Centrifugal Exhaust Fan
CFM Range	5400 CFM
Mounting Type	Roof or Wall Mount

Performance is centered around an operating range of 5400 CFM. The combination of a 16-inch backward-curved wheel, 1 HP motor, and standard 1725 RPM operating speed provides the core mechanical configuration listed for this model.

PERFORMANCE SPECIFICATIONS

Parameter	Value
Motor Horsepower	1 HP
Motor Type	ODP (Open Drip Proof)
Fan Wheel Type	Backward Curved Centrifugal Impeller
Wheel Diameter	16 inches
RPM (Standard)	1725 RPM (60 Hz)

If the installation is in a mobile kitchen, please ensure that either a door or a window is open. These fans are not designed to operate in a sealed environment. Operating the fan with both doors and windows closed could lead to the motor overheating

ELECTRICAL SPECIFICATIONS

Specification	Single Phase 120V
Voltage Input	120V AC
Frequency	60 Hz
Full Load Amperage	5.5 A

The electrical configuration is intended to provide a straightforward single-phase connection. The listed voltage, frequency, and full-load amperage should be considered during electrical planning and installation.

3D DRAWING – E-DUC15AE28-1

Product Reference Drawing

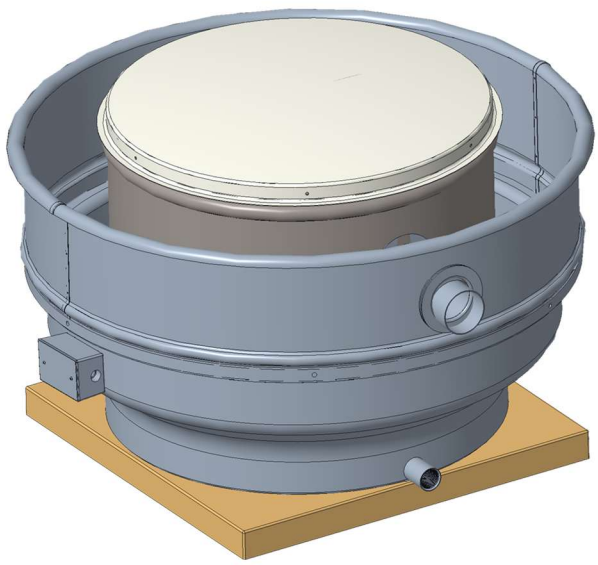

Figure: 3D line-view representation of the E-DUC15AE28-1 exhaust fan assembly

The compact overall dimensions help define the installation footprint of the roof-mounted unit. These measurements can be used as a reference when planning the mounting location and required clearance around the fan.

BASE DIMENSIONS

Dimension	Measurement
Base Height	2 inches
Base Width	28 inches
Base Depth	28 inches

PHYSICAL DIMENSIONS

Dimension	Measurement
Overall Height	28 inches
Overall Width	38 inches
Overall Depth	38 inches

MATERIALS & CONSTRUCTION

Component	Material & Specifications
Housing	Galvanized Steel (Base and Motor Housing) and Aluminium Grade 1100
Fan Impeller/Wheel	Galvanized Steel, with Aluminum blades
Shaft	Steel hardened and polished with sealed ball bearings
Motor Mounting	Direct drive